RICOMAN®



Flow+ Ring

User Manual

Please read these instructions carefully before installation and leave a copy with the end user for future reference.

SAFETY INFORMATION

We recommend that luminaires be installed by a fully qualified and competent electrician who understands building regulations and the current IEE wiring regulations. The light source contained in this luminaire shall only be replaced by the manufacturer or a qualified professional. Before commencing any installation or maintenance work, ensure that the electricity is switched off at the mains.

IMPORTANT USER INFORMATION

Please install and use strictly in accordance with these instructions. Make sure that you have all the tools and equipment to complete the installation safely and correctly. Improper installation could cause harm to your property and/or person and void your warranty. It is the installer's responsibility to consider fire & safety risk and take appropriate precautions.

PRE INSTALLATION INSTRUCTIONS & GUIDELINES

- Switch off the mains before commencing installation and remove the appropriate circuit fuse or lock off the Mains Circuit Board.
- Do not introduce any parts other than the ones provided to the inside of this fitting, as this is dangerous and would void your warranty.
- The luminaire must be installed on to a ceiling which should be firm enough to hold the weight of more than five times of the fitting itself.
- The luminaire must not be installed above hot objects such as ovens to avoid damage to the fitting.
- LED Chips can be damaged by gases, vapours, etc emitted by materials such as rubber, causing a severe reduction in light output.
- Ensure there is adequate space for ventilation around the fitting.
- Ensure that all electrical connections are tight with no loose strands.
- This product is designed for permanent connection to fixed wiring and must be fixed to a suitable circuit (protected with the appropriate Mains Circuit Board or fuse).
- This product is not suitable for use on highly flammable surfaces (e.g. polystyrene, textiles).
- Before making the fixing hole(s), check that there are no obstructions hidden beneath the mounting surface, such as pipes or cables.



0161-451-5924
sales@ricoman.com

1 Ring Connection Instructions

1. For 35mm Ring Profile

1

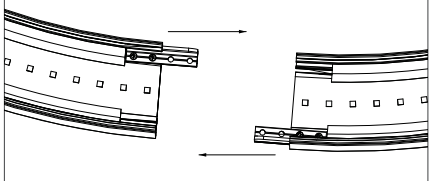

Insert the luminaire connectors into each other

2

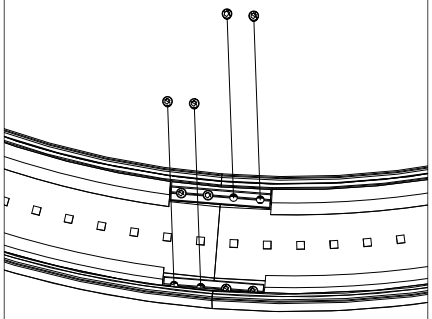

Use screws to tighten the screw holes

3

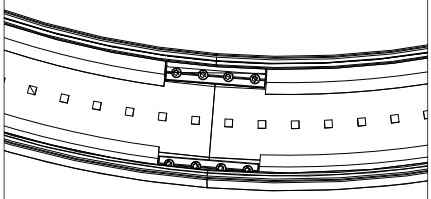

Make sure the screws are all tightened

4

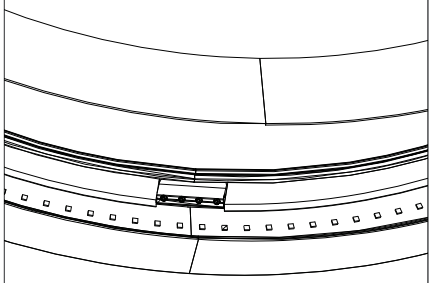

Fasten the luminaire cover to the luminaire

5

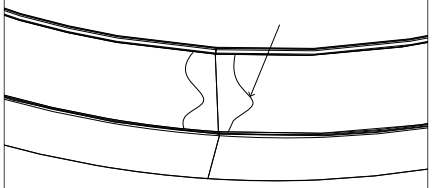

Apply silicone to the luminaire joints (back and sides of the luminaire)

6

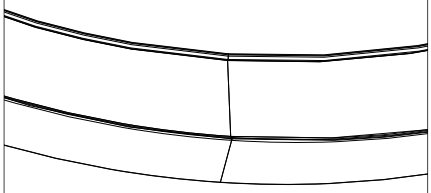

Clean the excess silicone

7

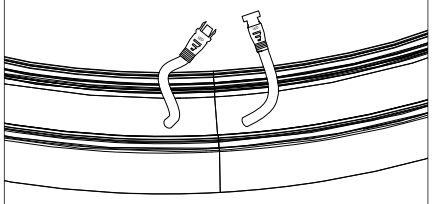

Connect the terminals on the back of the luminaire

8

Insert the terminals into each other

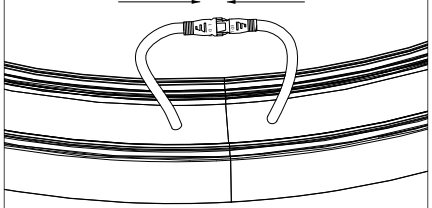

Connection of the luminaire is now complete

2 Mounting Options for Flow+ Ring



1. Suspendend With Ceiling Plate (Pag.4)

2. Suspendend With Small Ceiling Plate & Mounting Rod (Pag.5)



3. Suspendend With Recessed Ceiling Plate (Pag.7)

4. Suspendend With Recessed Ceiling Plate & Mounting Rod (Pag.8)



5. Suspendend With Ceiling Driver Box (Pag.10)

6. Suspendend With Ceiling Driver Box & Mounting Rod (Pag.12)



7. Surface Mounted (Pag.14)



8. Suspendend With Ceiling Rose (Pag.15)

1. Suspendend With Ceiling Plate

1

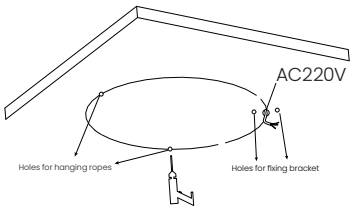

Drill holes for suspension wires and brackets on the ceiling with electric drill tools

2

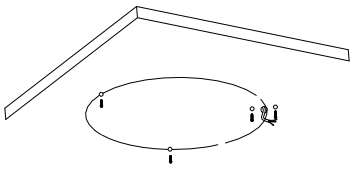

Insert the plugs into the holes

3

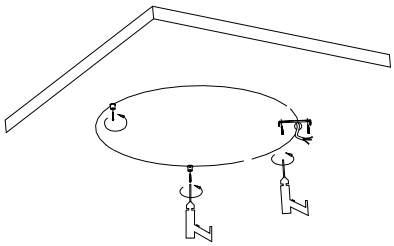

Fix the suspension wire accessory and bracket to the ceiling with screws

4

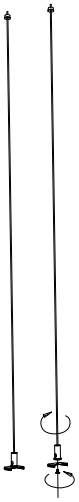

Attach the clips to the suspension wires

5

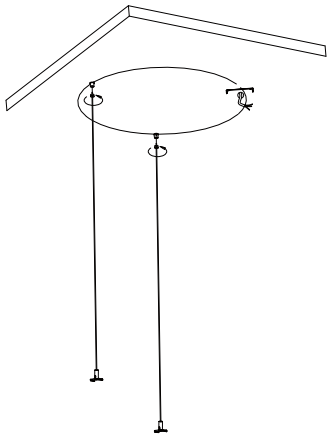

Install the suspension wires to ceiling fixtures

6

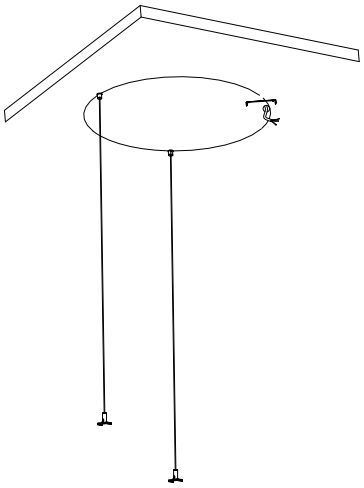

7

Pass the power cord through the hole in the junction box and fasten it with a screw

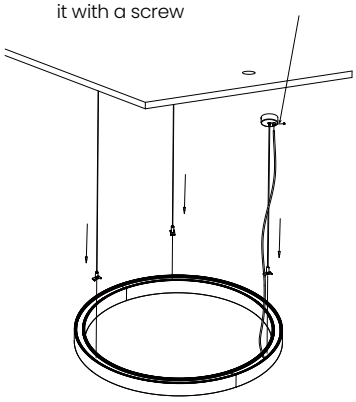

Snap the clips to the back of the luminaire

8

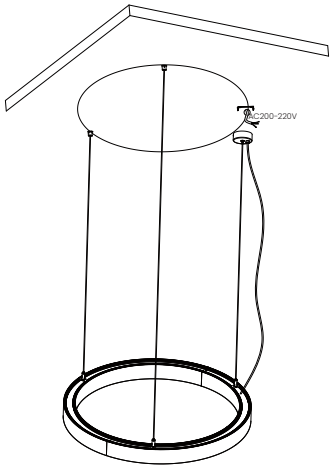

9

Plug the AC cord and power cord into the corresponding terminal ports

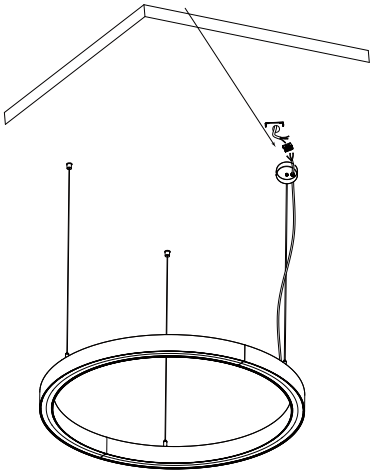

1. Suspendend With Ceiling Plate

10

Use screws to fix the junction box bracket to the ceiling

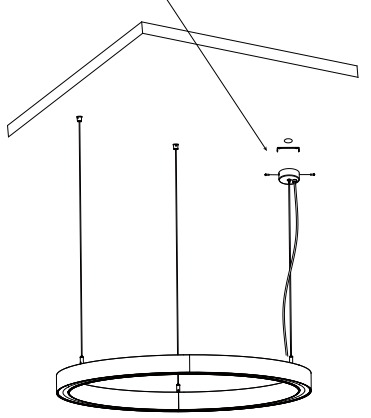

11

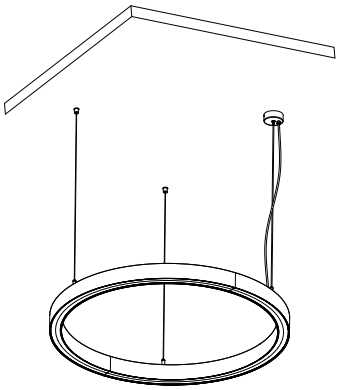

Installation Complete

2. Suspendend With Small Ceiling Plate & Mounting Rod

1

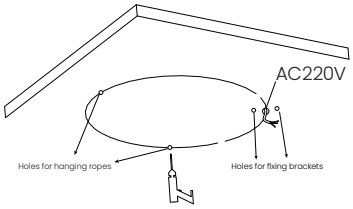

Drill holes for suspension wires and brackets on the ceiling with electric drill tools

2

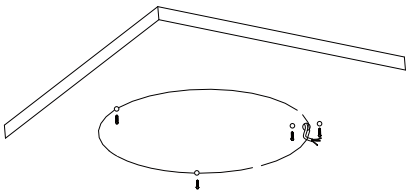

Insert the plugs into the holes

3

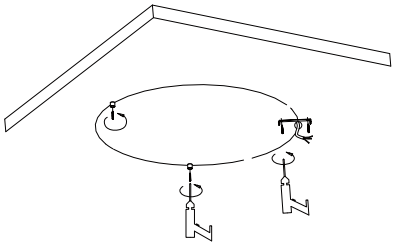

Fix the rod accessory and bracket to the ceiling with screws

4

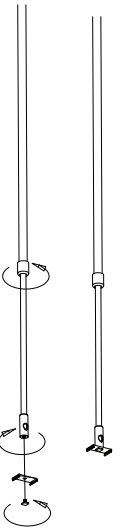

Rotate the nut to adjust the rod up and down

Assemble the clips to the rod

5

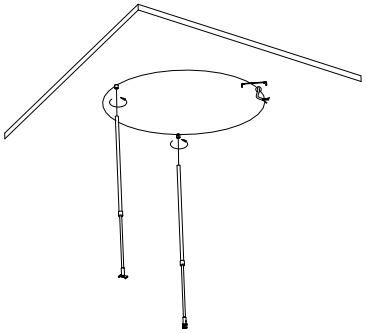

Install the rod to ceiling fixtures

6

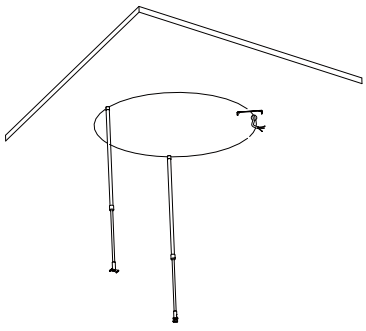

7

Pass the power cord through the hole in the junction box and fasten it with a screw

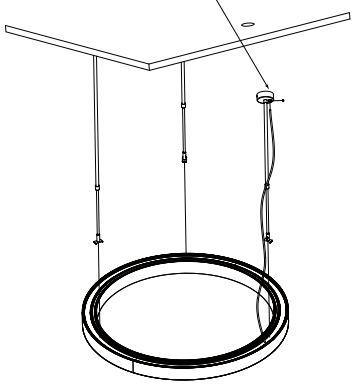

Snap the clips to the back of the luminaire

8

Plug the AC cord and power cord into the corresponding terminal ports

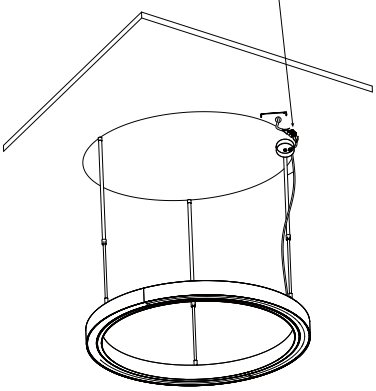

9

Use screws to fix the junction box bracket to the ceiling

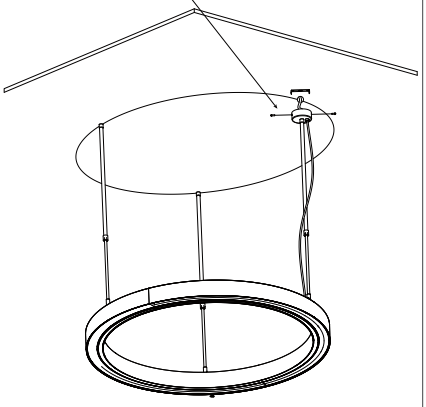

10

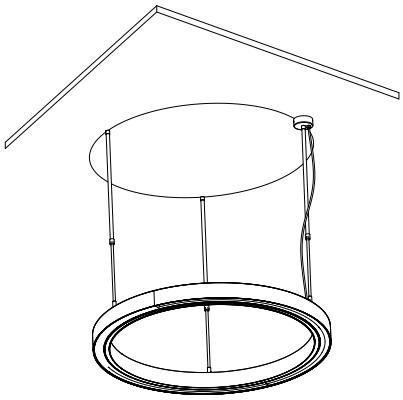

Installation Complete

3. Suspendend With Recessed Ceiling Plate

1

Drill ceiling plate mounting hole
Cut Out D75mm

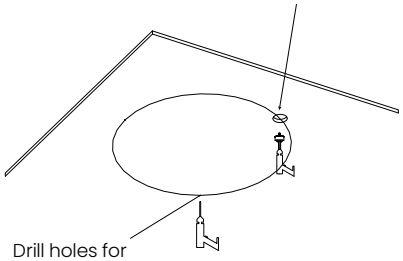

Drill holes for
the suspensions

2

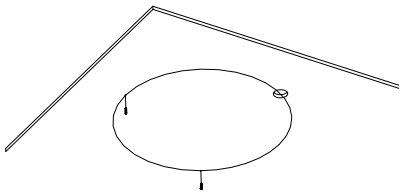

Insert the plugs into the holes

3

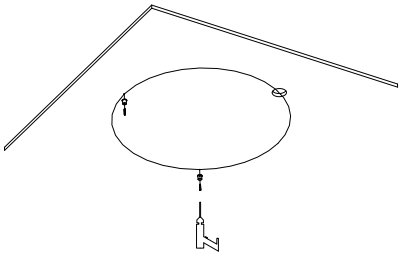

Fix the ceiling plate accessory to the ceiling with screws

4

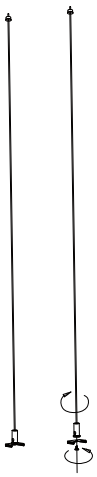

Attach the clips to the hanging wires

5

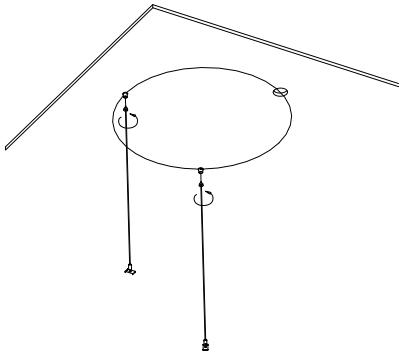

Install the suspension wires to ceiling fixtures

6

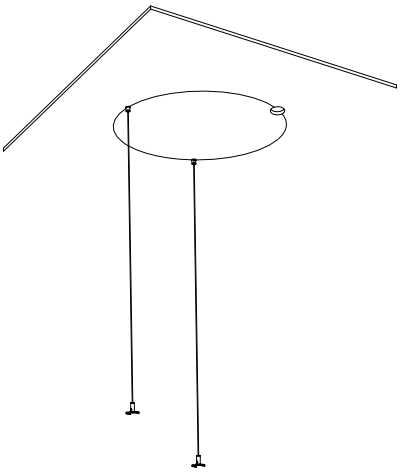

7

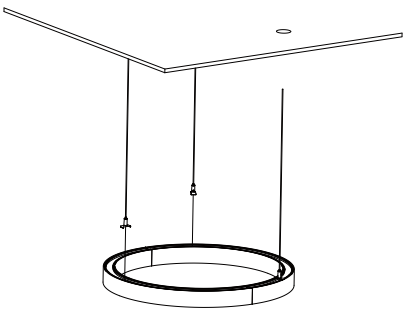

Snap the clips to the back of the luminaire

8

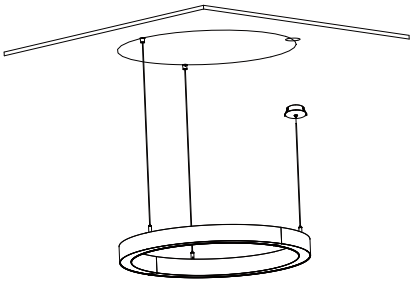

9

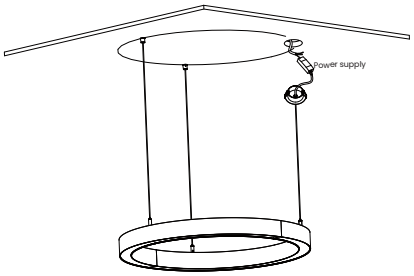

Connect the power supply to the AC cable

3. Suspendend With Recessed Ceiling Plate

10

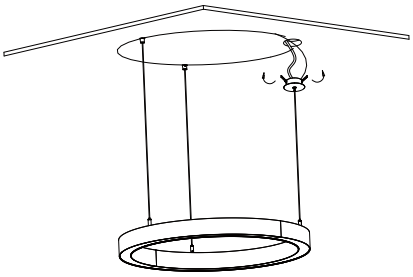

Put the power supply into the ceiling through the hole, while pushing the ceiling plate upwards into the ceiling hole to fix the springs

11

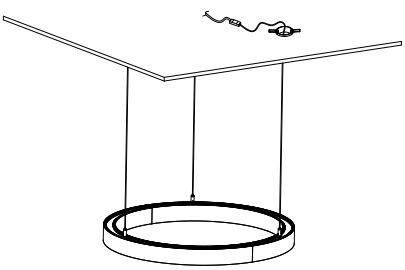

Installation Complete

4. Suspendend With Recessed Ceiling Plate & Mounting Rod

1

Drill ceiling plate mounting hole
Cut Out D75mm

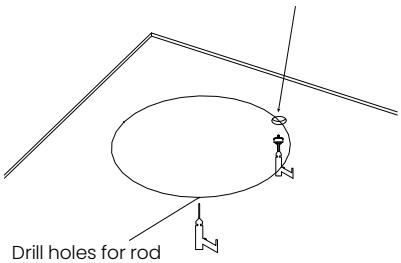

Drill holes for rod

2

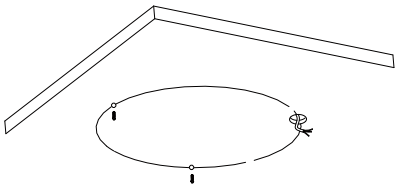

Inser the plugs into the holes

3

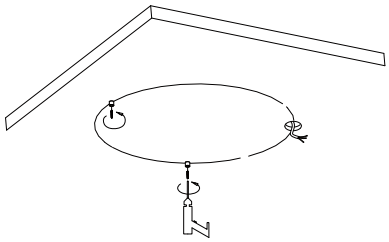

Fix the ceiling plate accessory to the ceiling with screws

4

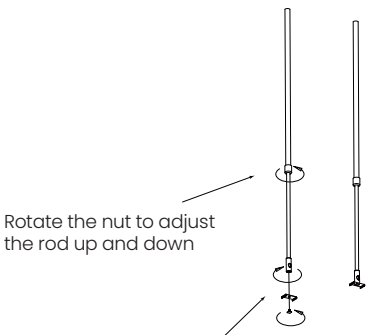

Rotate the nut to adjust the rod up and down

Assemble the clips to the rod

5

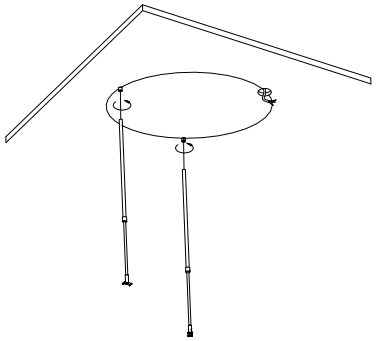

Install the rod to ceiling fixtures

6

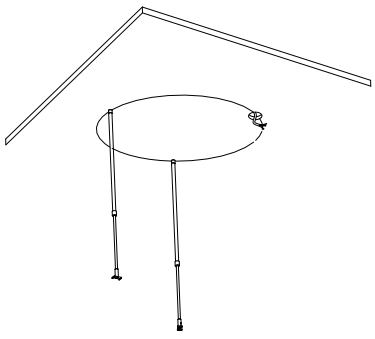

4. Suspendend With Recessed Ceiling Plate & Mounting Rod

7.1

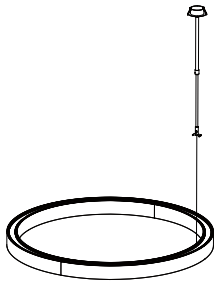

luminaire input wire passes through the slanted hole in the rod, and the clip snaps onto the luminaire

7.2

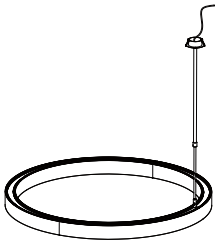

Clip snaps onto the luminaire

8

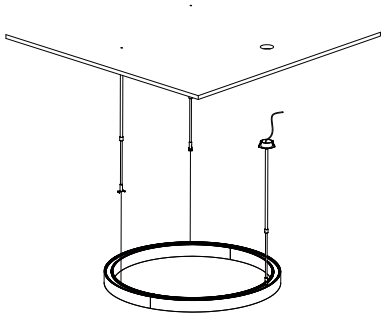

Snap the clips to the back of the luminaire

9

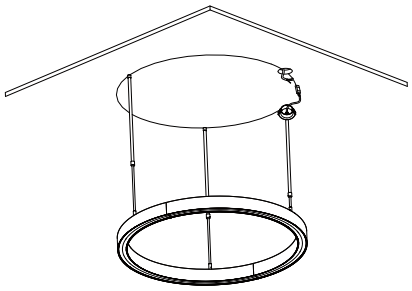

Connect the power supply to the AC cable

10

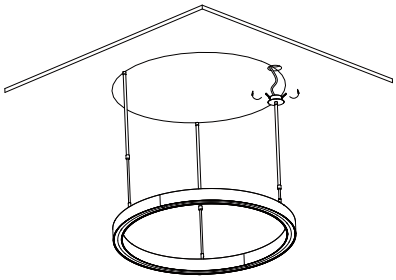

Put the power supply into the ceiling through the hole,while pushing the ceiling plate upwards into the ceiling hole to fix the springs

11

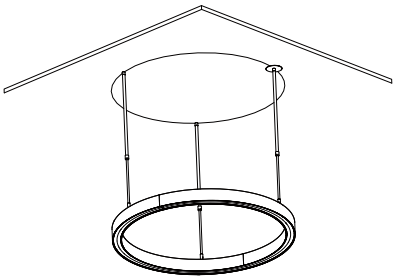

12

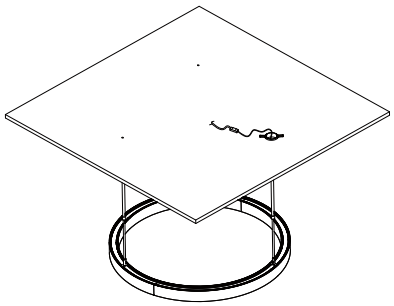

Installation Complete

5. Suspendend With Ceiling Driver Box

1

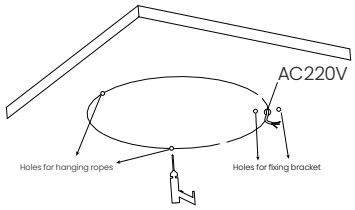

Drill holes for suspension wires and brackets on the ceiling with electric drill tools

2

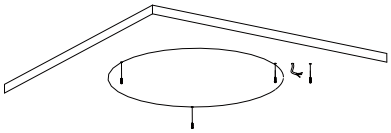

Insert the plugs into the holes

3

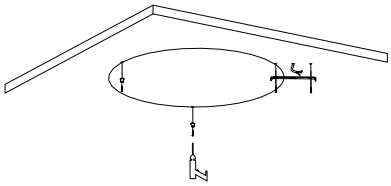

Fix the suspension wire accessories and bracket to the ceiling with screws

4

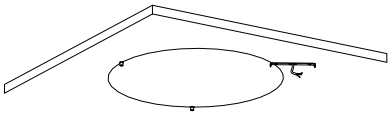

5.



Attach the clips to the hanging wires

6

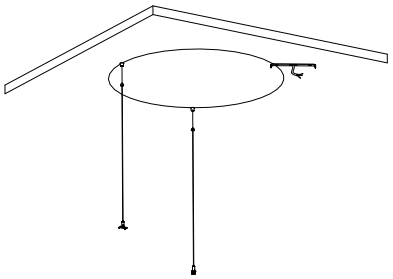

Install the suspension wires to ceiling fixtures

7

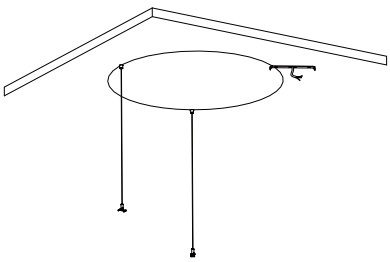

8.1

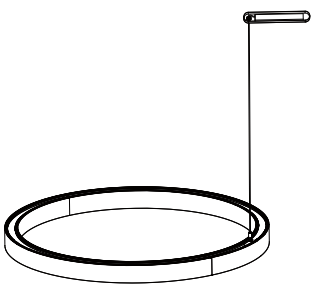

Luminaire input cable connects to the output of the power supply

8.2

Snap the clips to the back of the luminaire

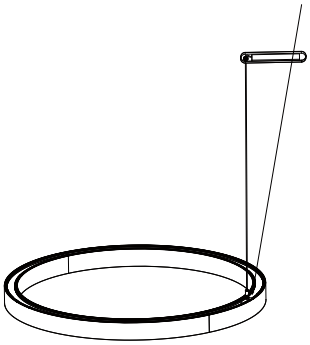

5. Suspendend With Ceiling Driver Box

9

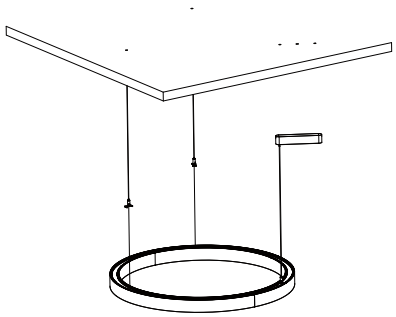

Snap the clips to the back of the luminaire

10

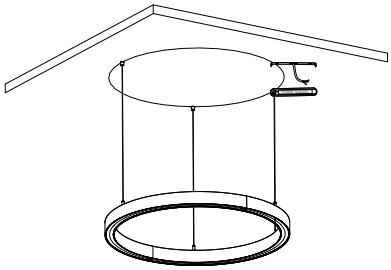

Connect the AC cable to the Input of the power supply

11

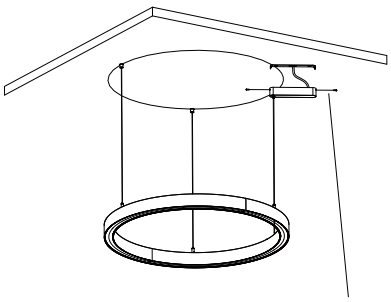

Attach the linear power box to the bracket and and fix the screws from both sides of the side

12

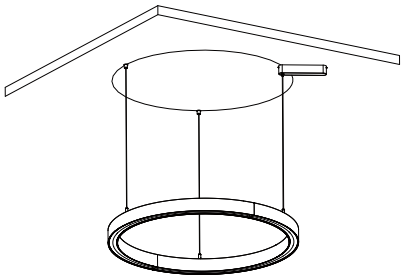

Installation Complete

6. Suspendend With Ceiling Driver Box & Mounting Rod

1

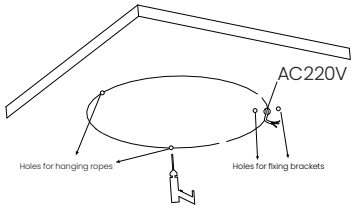

Drill holes for suspension wires and brackets on the ceiling with electric drill tools

2

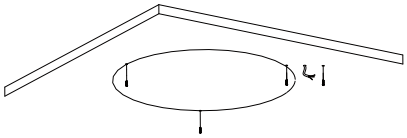

Insert the plugs into the holes

3

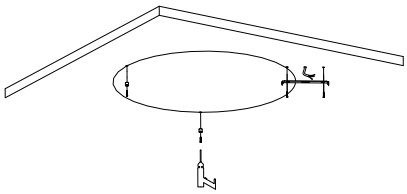

Fix the rod accessories and bracket to the ceiling with screws

4

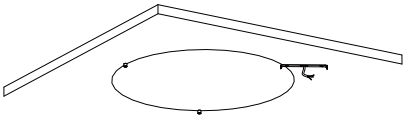

5

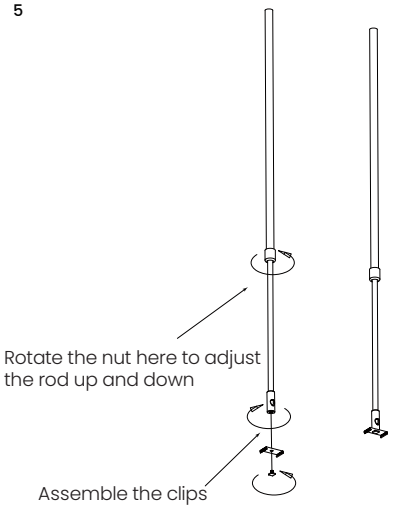

6

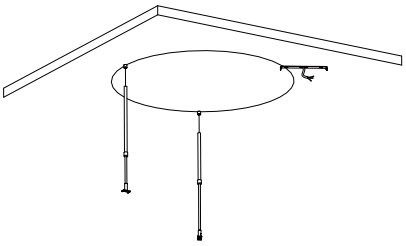

Install the rods to ceiling fixtures

7

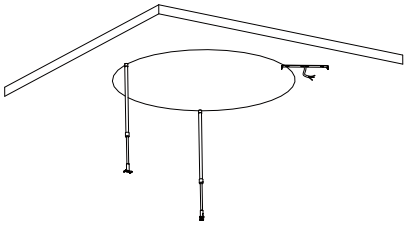

8.1

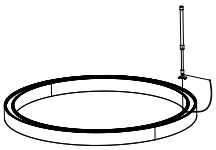

luminaire input wire passes through the slanted hole in the rod, and the clip snaps onto the luminaire

8.2

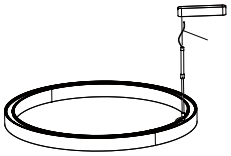

Thread the luminaire input wire through the linear power box crossing hole, and then let the linear power box is fixed to the boom

6. Suspendend With Ceiling Driver Box & Mounting Rod

8.3

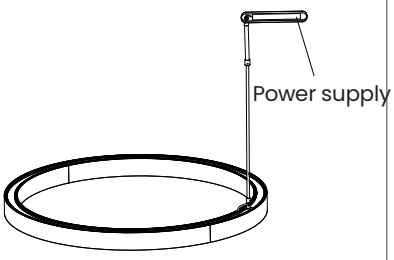

Luminaire input cable connects to the output of the power supply

9

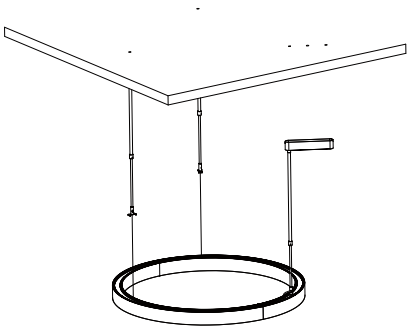

Snap the clips to the back of the luminaire

10

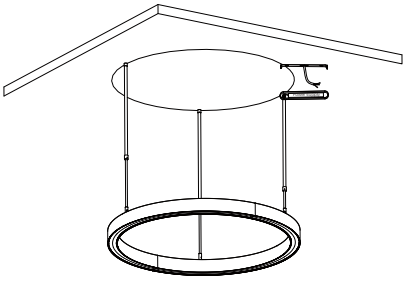

Connect the AC cable to the Input of the power supply

11

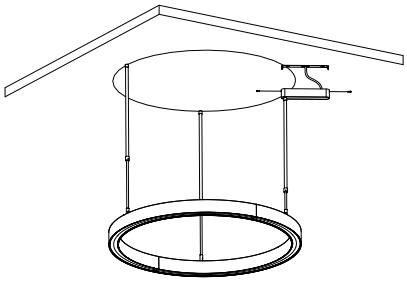

Attach the linear power box to the bracket and and fix the screws from both sides of the side

12

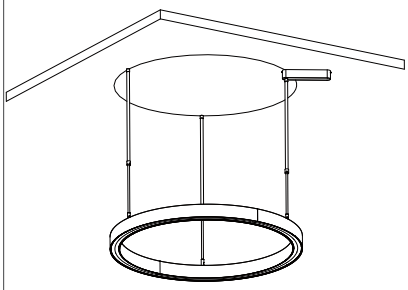

Installation Complete

7. Surface Mounted

1

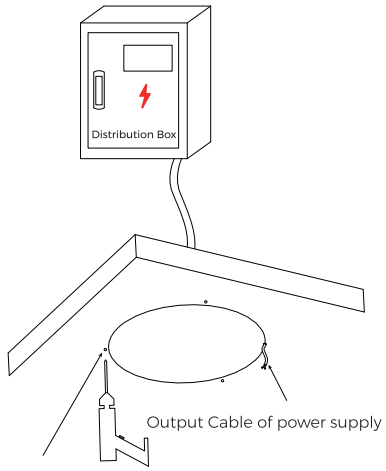

Use tool to drill holes

2

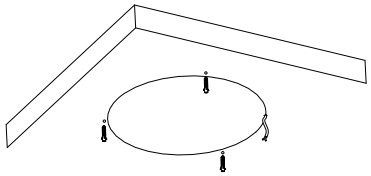

Inser the plugs into the holes

3

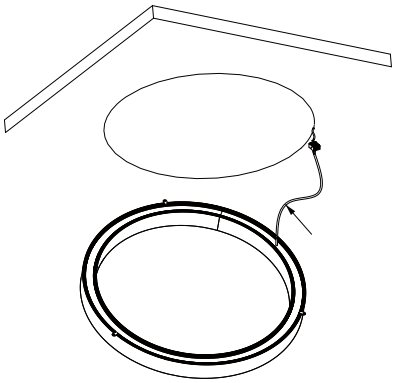

Use terminals to connect two wires

4

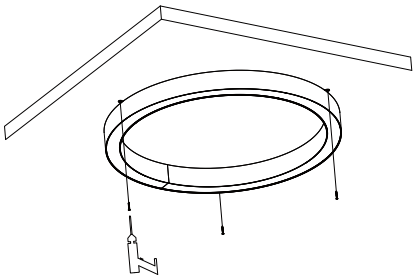

Use screws to fix the luminaire to the ceiling

5

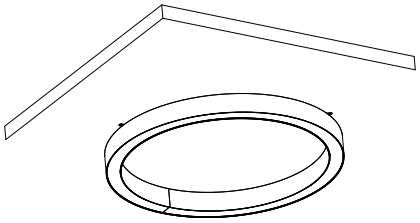

Installation Complete

8. Suspendend With Ceiling Rose

Not available for Rings bigger than 2000mm diameter

1

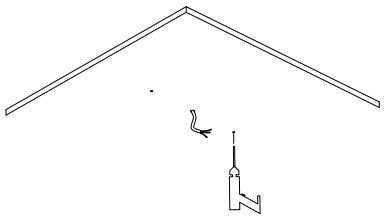

Use tool to drill expansion plug holes

2

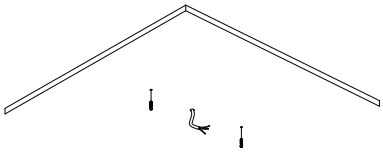

Drive expansion plugs into the holes

3

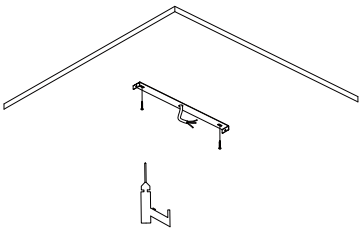

Fix the bracket with screws

4

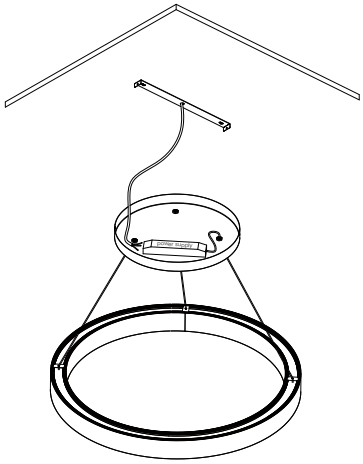

Connect the power supply to the AC wire

5

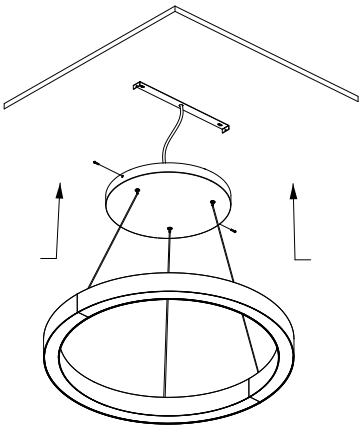

Push up round power box to the bracket

6

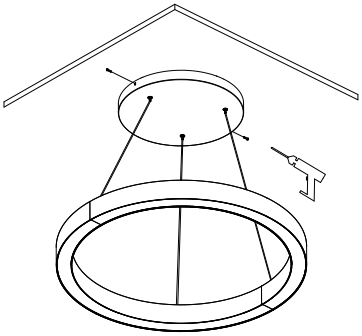

Lock screws from both sides of the round power box, and fix the box to the bracket

7

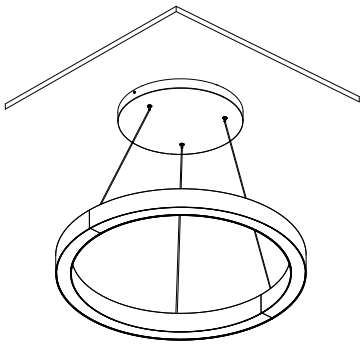

Installation completed